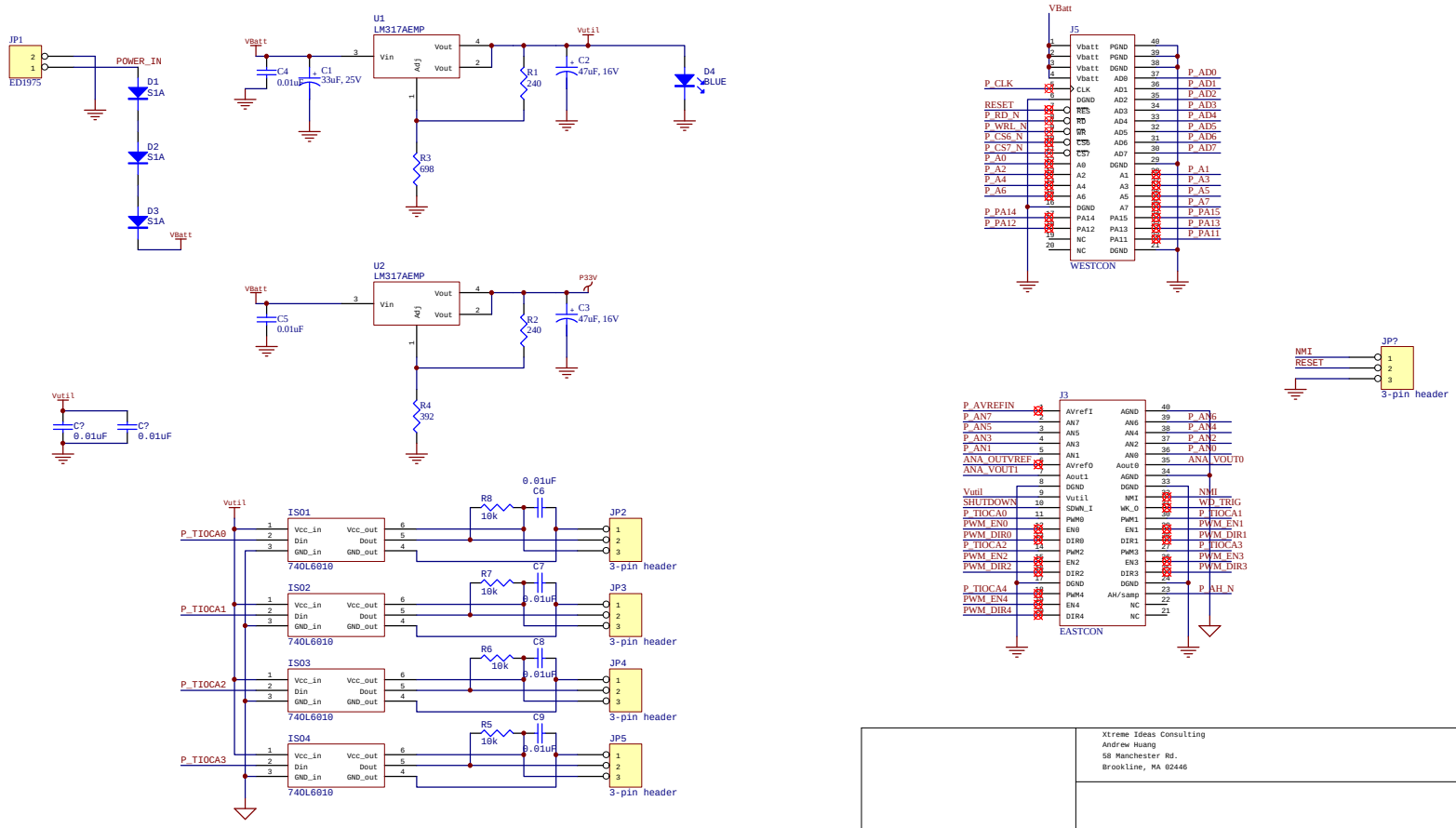

Xtreme Ideas Consulting
Andrew Huang
58 Manchester Rd.
Brookline, MA 02446

Size	FCSM No.	DWG No.	Rev
B			

Scale

Sheet 2 of 4